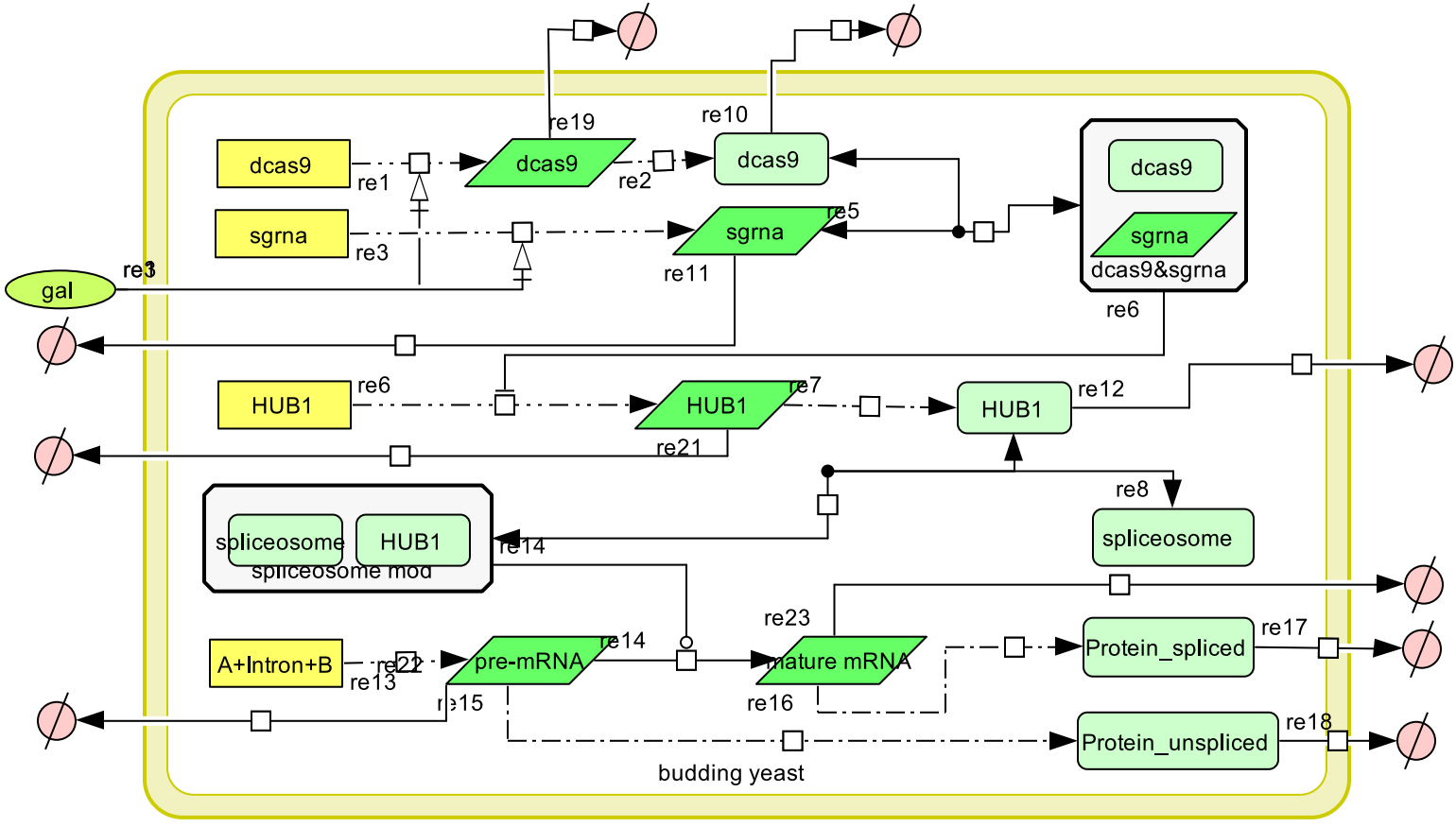
dcas9
re1
dcas9
re19
re2
dcas9
re10
sgrna
re3
sgrna
re5
re11
gal
re3
dcas9
sgrna
dcas9&sgrna
re6
HUB1
re6
HUB1
re7
re21
HUB1
re12
re8
spliceosome
spliceosome
HUB1
spliceosome mod
re14
A+Intron+B
re13
re22
pre-mRNA
re14
re15
re23
mature mRNA
re16
Protein_spliced
re17
Protein_unspliced
re18
budding yeast